GROVE	STEUERVENTIL HUBWINDE KPL. CONTROL VALVE HOISTING WINCH CPL.	BILDTAFEL PICTORIAL DISPLAY			GMK4080-3
		05.15	4161954-ETL B	1/1	

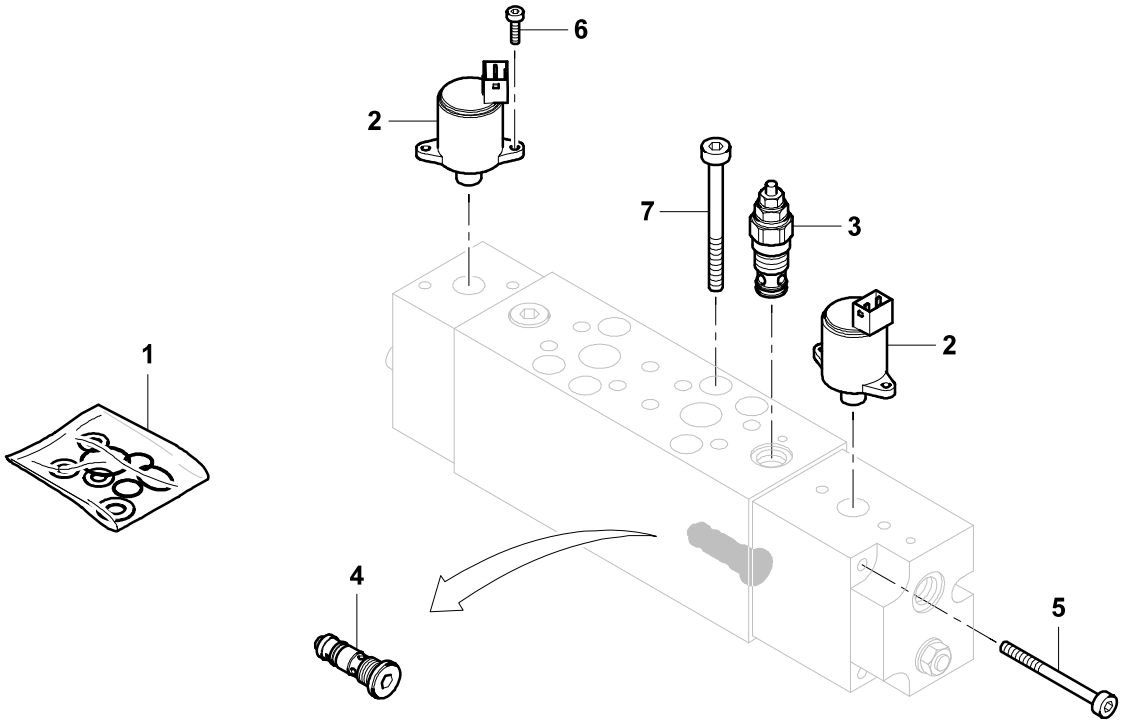

4161954-B-BL01-0515-0000